Matt Butson - Proposed Garage Extension

DRAWINGS

Number	Revision	Title	Scale (A3)
GA00	0	Cover Page (This sheet) Index & Site Plan & Set-back clarification (NTS)	1:200
GA01	0	Floor Plan	1:100
GA02	0	Elevations	1:100
GA03	0	Elevations	1:100
GA04	0	Set Out Plan and Bracing	1:50
GA05	0	Slab Plan	1:50
GA06	0	Roof Plan	1:50
GA07	0	Roof Framing Plan (& Reflected Ceiling Plan 1:100)	1:50
GA08	0	Plumbing & Drainage Plan, Electrical Plan And Risk Matrix Plan	1:100
GA20	0	Sections	1:50
GD01	0	Details	1:5
GD02	0	Details	1:5
GD03	0	Details	1:5
GD04	0	Details	1:5

Site Plan

Scale 1:200 @ A3

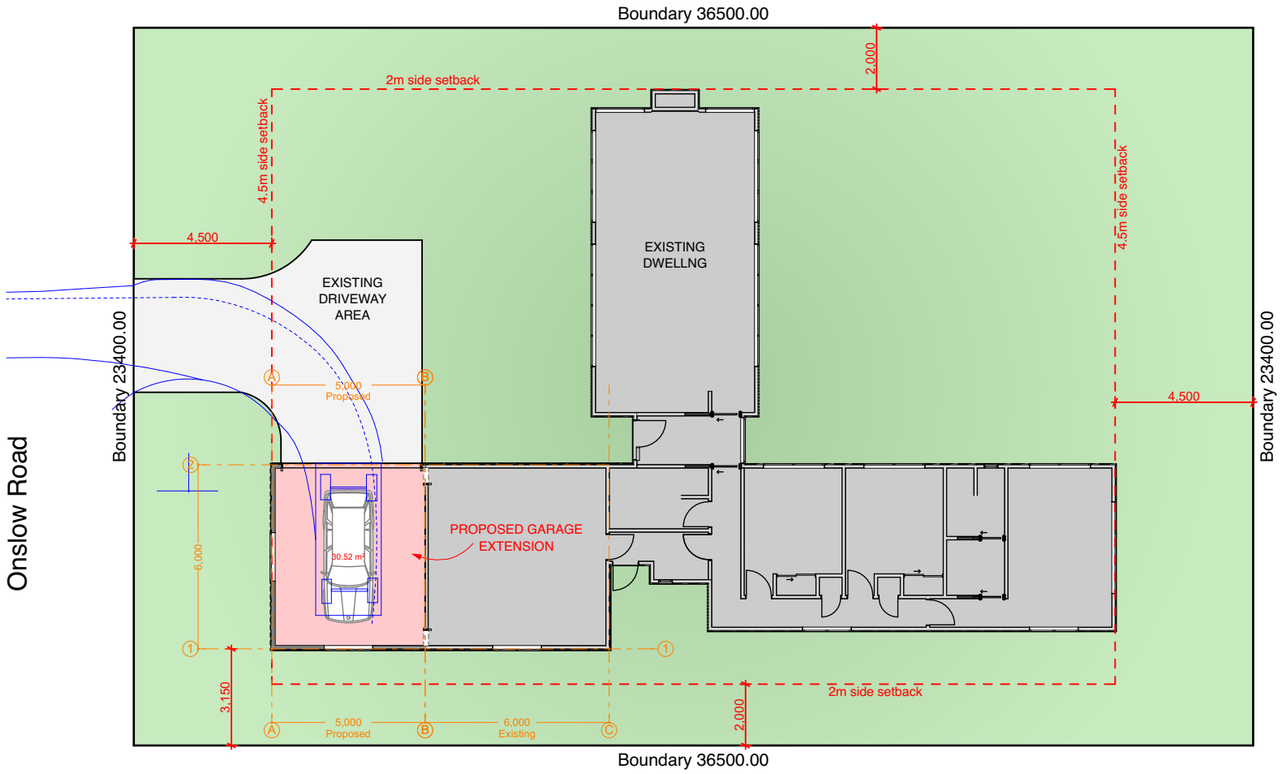

For Downpipe locations and stormwater refer to GA08

Site Coverage:

Site Area	-	854.10msq
Existing house	-	182.9msq (21.4% cover)
Proposed garage	-	30.5msq (3.6% cover)
New total coverage	-	213.4msq (24.9% cover)

Set-back clarification (Taken from eDocs PIM)

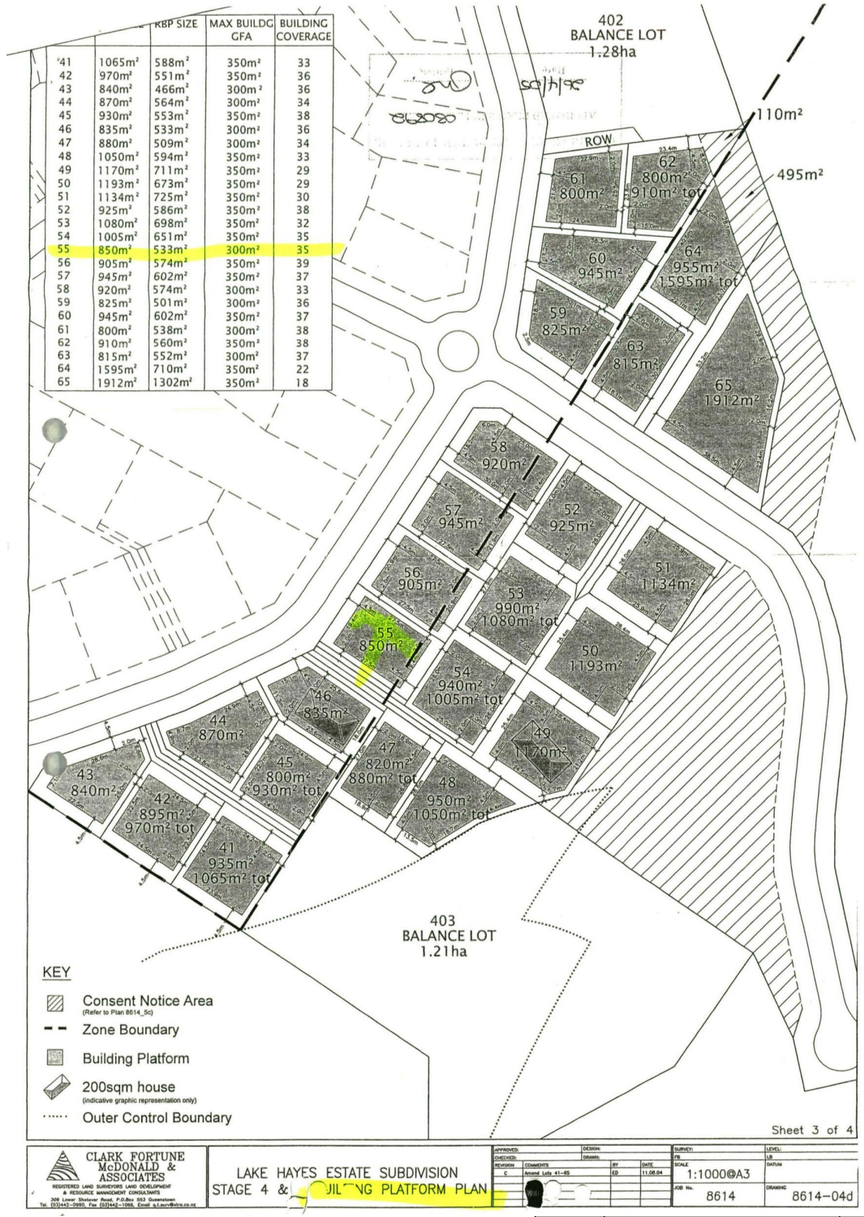

'41	1065m²	588m²	350m²	33
42	970m²	551m²	350m²	36
43	840m²	466m²	300m²	36
44	870m²	564m²	300m²	34
45	930m²	553m²	350m²	38
46	835m²	533m²	300m²	36
47	880m²	509m²	300m²	34
48	1050m²	594m²	350m²	33
49	1170m²	711m²	350m²	29
50	1193m²	673m²	350m²	29
51	1134m²	725m²	350m²	30
52	925m²	586m²	350m²	38
53	1080m²	698m²	350m²	32
54	1005m²	651m²	350m²	35
55	850m²	533m²	300m²	35
56	905m²	574m²	350m²	39
57	945m²	602m²	350m²	37
58	920m²	574m²	300m²	33
59	825m²	501m²	300m²	36
60	945m²	602m²	350m²	37
61	800m²	538m²	300m²	38
62	910m²	560m²	350m²	38
63	815m²	552m²	300m²	37
64	1595m²	710m²	350m²	22
65	1912m²	1302m²	350m²	18

Issue Date:	Issue:	No:
22/09/17	Vehicle Manouvering	05
19/09/17	Council RFI Revisions	04
08/09/17	Barge Eave changed to 600	03
30/06/17	Variation	02
23/02/17	Building Consent Issue	01

Matt Butson - Garage Extension
62 Onslow Rd, Lake Hayes Estate

Scale: 1:200 @ A3	Drawing Title: **SITE PLAN**	Drawing No: **GA00**
Drawn: CH		

mark gray ARCHITECT

PO box 1733 queenstown +64 3 441 1014 0275 857 448
mark@mgarchitect.co.nz www.markgray.co.nz

Do not scale off print - refer to figured dimensions.
Refer to larger details where possible.
Confirm all dimensions on site prior to construction.
Consult with Architect immediately if discrepancies are found.

Floor Plan

Scale 1:100 @ A3

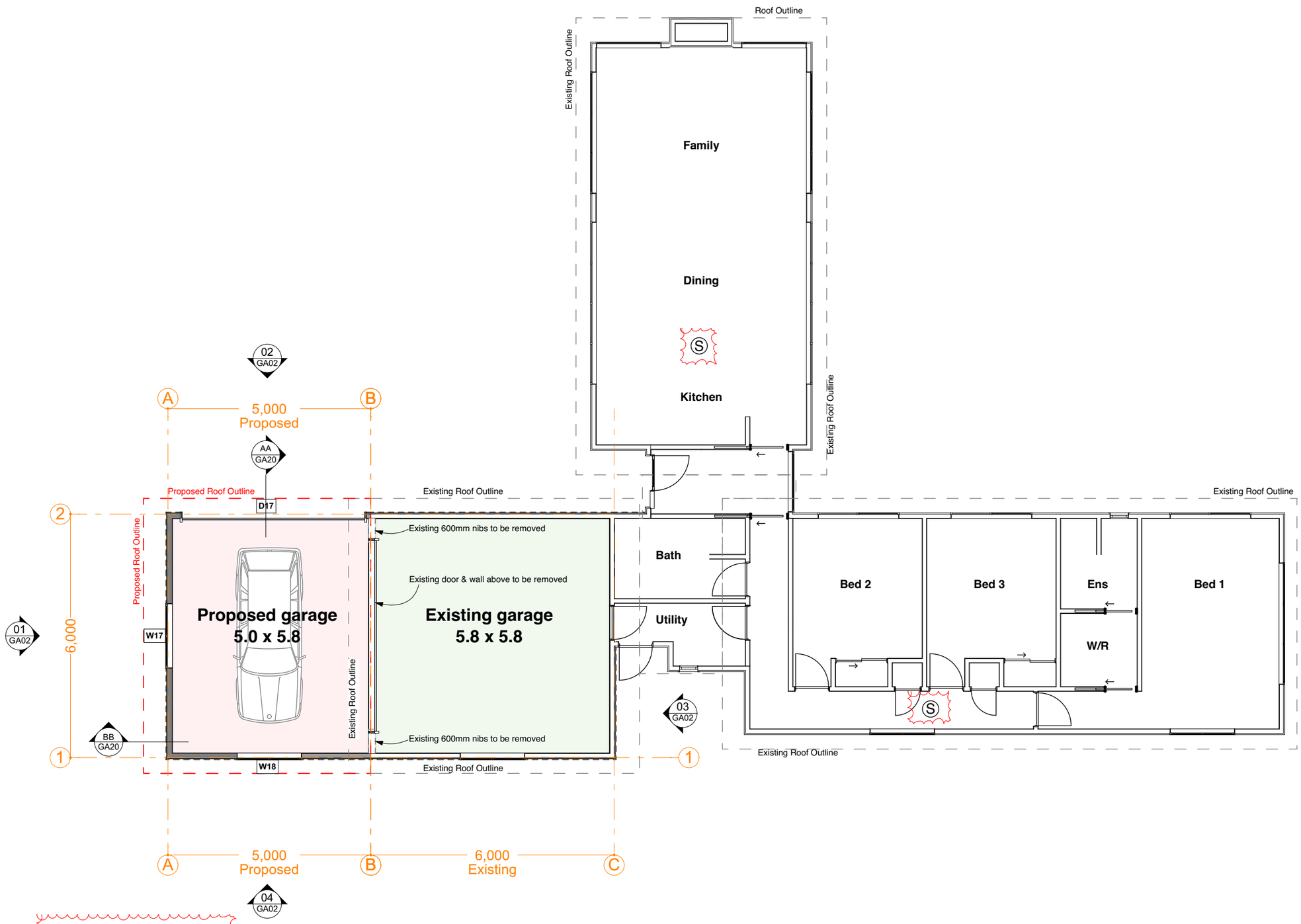

Legend:

S = Smoke Detector

22/09/17	Vehicle Manouvering	05
19/09/17	Council RFI Revisions	04
08/09/17	Barge Eave changed to 600	03
30/06/17	Variation	02
23/02/17	Building Consent Issue	01
Issue Date:	Issue:	No:

Matt Butson - Garage Extension
62 Onslow Rd, Lake Hayes Estate

Scale:	Drawing Title:	Drawing No:
1:100 @ A3	**FLOOR PLAN**	**GA01**
Drawn: CH		

mark gray
ARCHITECT

PO box 1733 queenstown +64 3 441 1014 0275 857 448
mark@mgarchitect.co.nz www.markgray.co.nz

Do not scale off print - refer to figured dimensions.
Refer to larger details where possible.
Confirm all dimensions on site prior to construction.
Consult with Architect immediately if discrepancies are found.

01 GA01 ELEVATION - FRONT
SCALE 1:100 @ A3

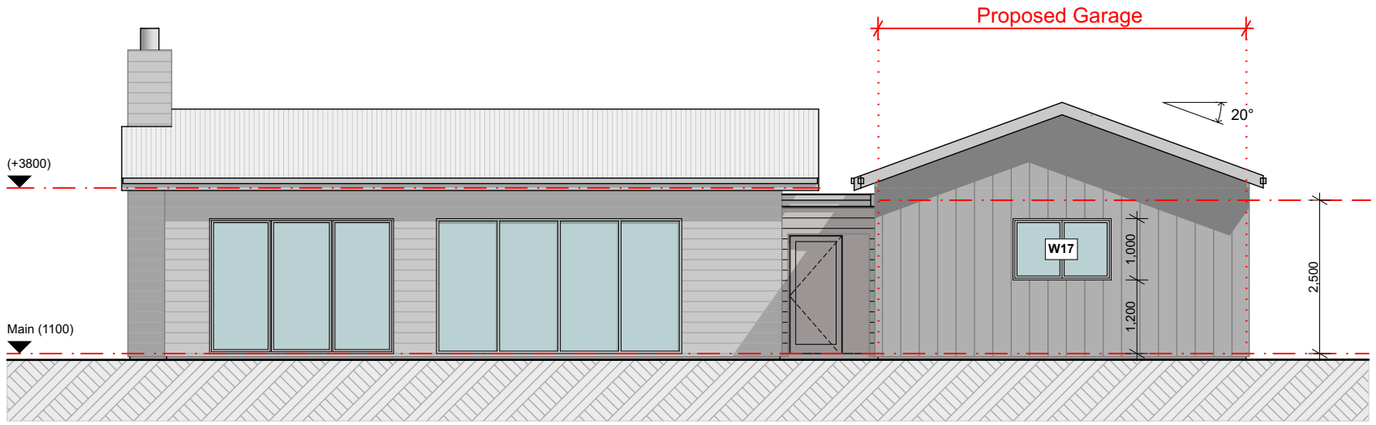

LEGEND:

Dimond Roofing to match existing

Cedar Battens over Shadowclad texture plywood @ 200ctrs
Paint finish - Colour: to match existing

Aluminium joinery to match existing - TBC

Dimond gutters, fascias & downpipes - Colour: to match existing

Soffits: Fibre cement board, painted - Colour: to match existing

Floor slab: Exposed edge to be rendered, painted - Colour: to match existing

02 GA01 ELEVATION - LEFT
SCALE 1:100 @ A3

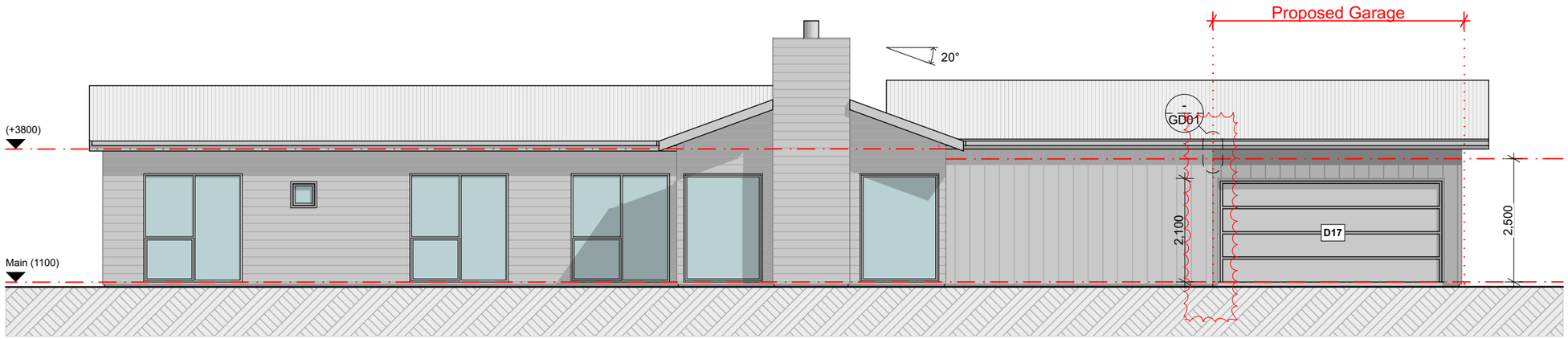

22/09/17	Vehicle Manouvering	05
19/09/17	Council RFI Revisions	04
08/09/17	Barge Eave changed to 600	03
30/06/17	Variation	02
23/02/17	Building Consent Issue	01
Issue Date:	Issue:	No:

Matt Butson - Garage Extension
62 Onslow Rd, Lake Hayes Estate

Scale:	Drawing Title:	Drawing No:
1:100 @ A3	**ELEVATIONS**	**GA02**
Drawn: CH		

mark gray
ARCHITECT

PO box 1733 queenstown +64 3 441 1014 0275 857 448
mark@mgarchitect.co.nz www.markgray.co.nz

Do not scale off print - refer to figured dimensions.
Refer to larger details where possible.
Confirm all dimensions on site prior to construction.
Consult with Architect immediately if discrepancies are found.

03 GA01 ELEVATION - REAR
SCALE 1:100 @ A3

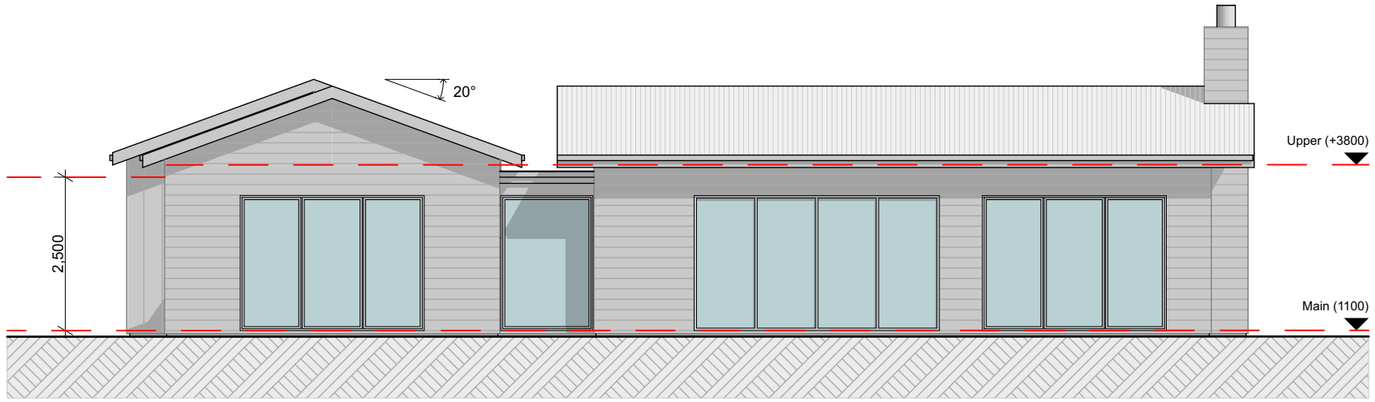

LEGEND:

Dimond Roofing to match existing

Cedar Battens over Shadowclad texture plywood @ 200ctrs
Paint finish - Colour: to match existing

Aluminium joinery to match existing - TBC

Dimond gutters, fascias & downpipes - Colour: to match existing

Soffits: Fibre cement board, painted - Colour: to match existing

Floor slab: Exposed edge to be rendered, painted - Colour: to match existing

04 GA01 ELEVATION - RIGHT
SCALE 1:100 @ A3

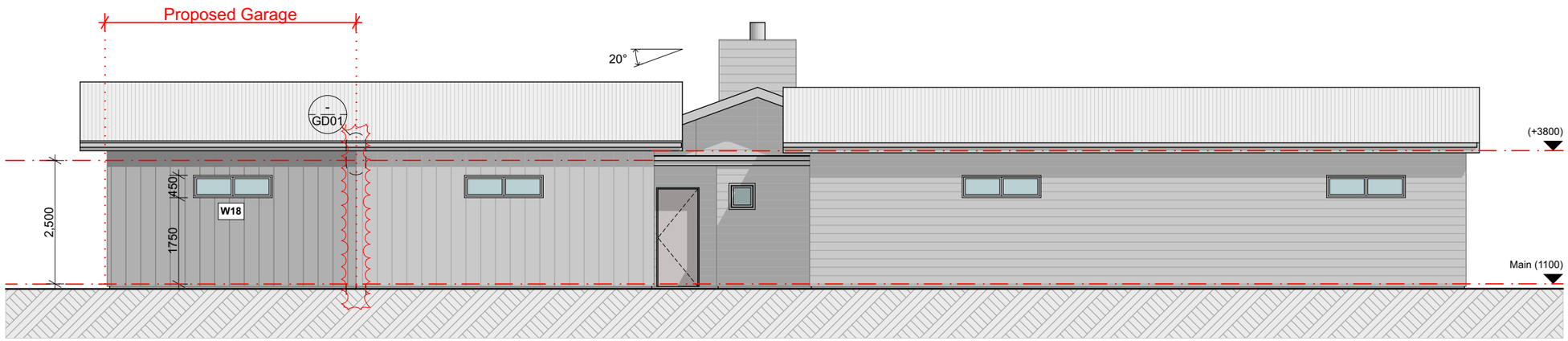

22/09/17	Vehicle Manouvering	05
19/09/17	Council RFI Revisions	04
08/09/17	Barge Eave changed to 600	03
30/06/17	Variation	02
23/02/17	Building Consent Issue	01
Issue Date:	Issue:	No:

Matt Butson - Garage Extension
62 Onslow Rd, Lake Hayes Estate

Scale:	Drawing Title:	Drawing No:
1:100 @ A3	**ELEVATIONS**	**GA03**
Drawn: CH		

mark gray
ARCHITECT

PO box 1733 queenstown +64 3 441 1014 0275 857 448
mark@mgarchitect.co.nz www.markgray.co.nz

Do not scale off print - refer to figured dimensions.
Refer to larger details where possible.
Confirm all dimensions on site prior to construction.
Consult with Architect immediately if discrepancies are found.

Set Out Plan

Scale 1:50 @ A3

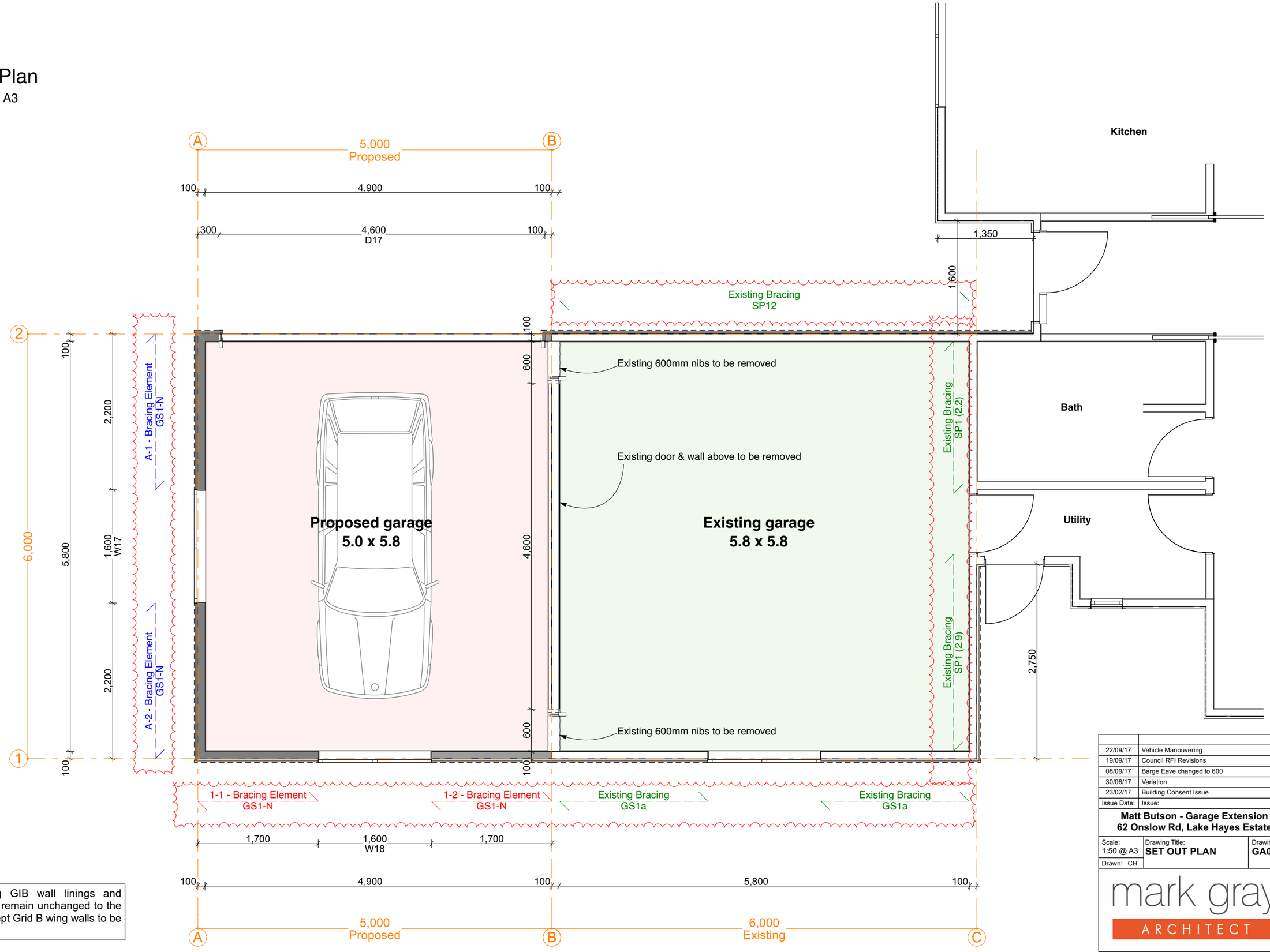

NOTE: All existing GIB wall linings and bracing elements to remain unchanged to the existing garage except Grid B wing walls to be removed.

Issue Date:	Issue:	No:
22/09/17	Vehicle Manouvering	05
19/09/17	Council RFI Revisions	04
08/09/17	Barge Eave changed to 600	03
30/06/17	Variation	02
23/02/17	Building Consent Issue	01

Matt Butson - Garage Extension
62 Onslow Rd, Lake Hayes Estate

Scale:	Drawing Title:	Drawing No:
1:50 @ A3	**SET OUT PLAN**	**GA04**
Drawn: CH		

mark gray
ARCHITECT

PO box 1733 queenstown +64 3 441 1014 0275 857 448
mark@mgarchitect.co.nz www.markgray.co.nz

Do not scale off print - refer to figured dimensions.
Refer to larger details where possible.
Confirm all dimensions on site prior to construction.
Consult with Architect immediately if discrepancies are found.

Slab Plan

Scale 1:50 @ A3

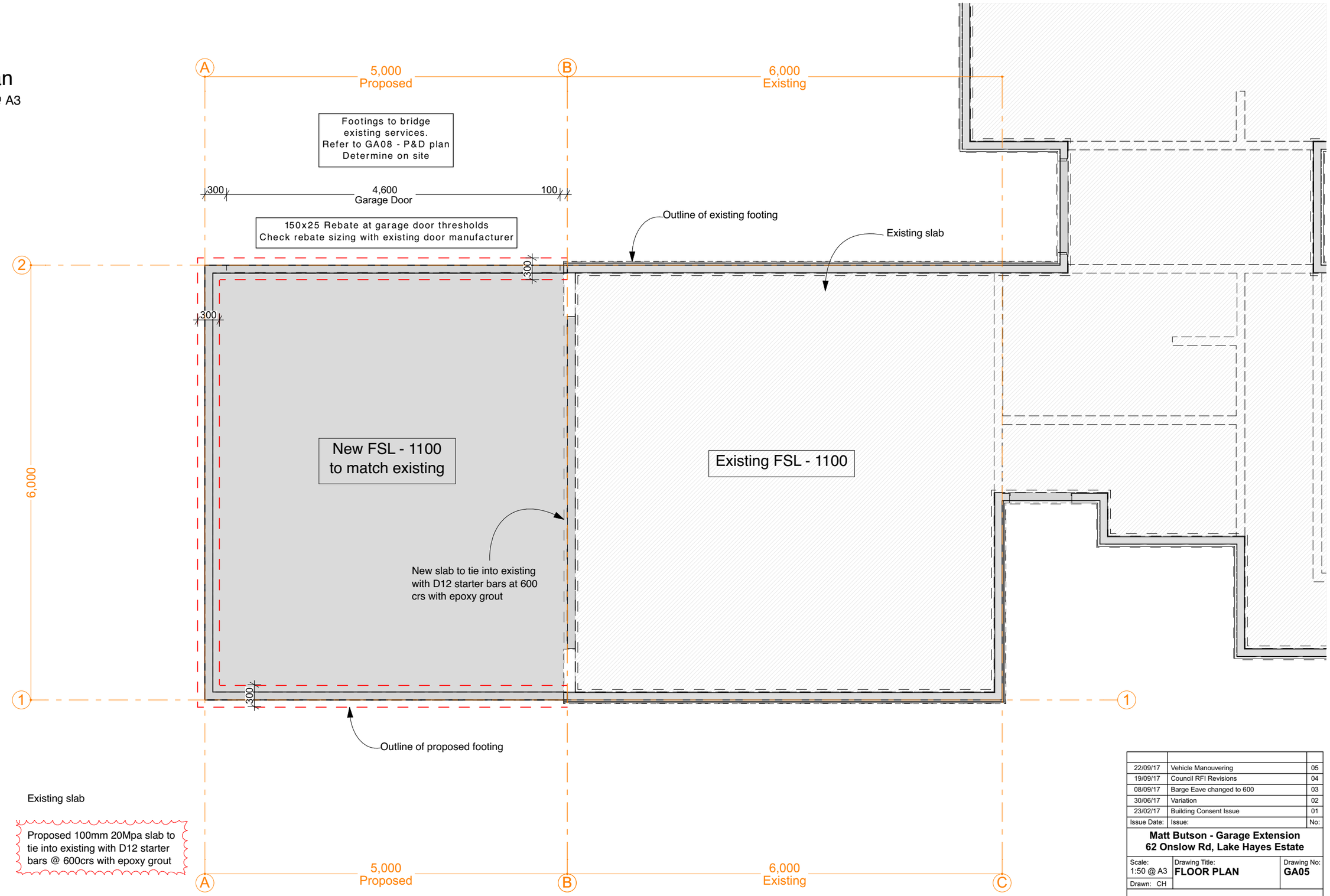

LEGEND:

Existing slab

Proposed 100mm 20Mpa slab to tie into existing with D12 starter bars @ 600crs with epoxy grout

22/09/17	Vehicle Manouvering	05
19/09/17	Council RFI Revisions	04
08/09/17	Barge Eave changed to 600	03
30/06/17	Variation	02
23/02/17	Building Consent Issue	01
Issue Date:	Issue:	No:

Matt Butson - Garage Extension
62 Onslow Rd, Lake Hayes Estate

Scale:	Drawing Title:	Drawing No:
1:50 @ A3	**FLOOR PLAN**	**GA05**
Drawn: CH		

mark gray
ARCHITECT

PO box 1733 queenstown +64 3 441 1014 0275 857 448
mark@mgarchitect.co.nz www.markgray.co.nz

Do not scale off print - refer to figured dimensions.
Refer to larger details where possible.
Confirm all dimensions on site prior to construction.
Consult with Architect immediately if discrepancies are found.

Roof Plan

Scale 1:50 @ A3

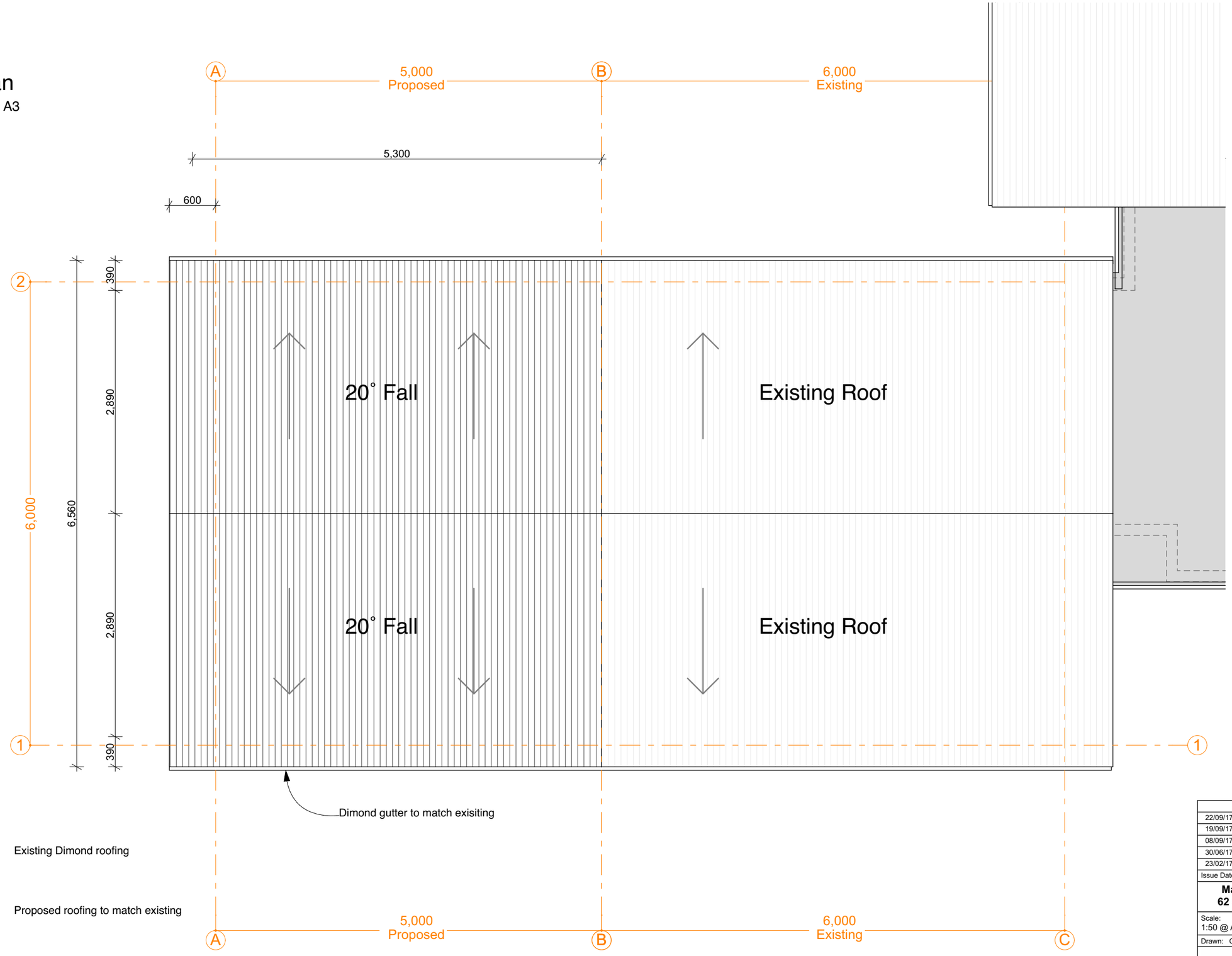

LEGEND:

Existing Dimond roofing

Proposed roofing to match existing

Issue Date:	Issue:	No:
22/09/17	Vehicle Manouvering	05
19/09/17	Council RFI Revisions	04
08/09/17	Barge Eave changed to 600	03
30/06/17	Variation	02
23/02/17	Building Consent Issue	01

Matt Butson - Garage Extension
62 Onslow Rd, Lake Hayes Estate

Scale:	Drawing Title:	Drawing No:
1:50 @ A3	**ROOF PLAN**	**GA06**
Drawn: CH		

mark gray
ARCHITECT

PO box 1733 queenstown +64 3 441 1014 0275 857 448
mark@mgarchitect.co.nz www.markgray.co.nz

Do not scale off print - refer to figured dimensions.
Refer to larger details where possible.
Confirm all dimensions on site prior to construction.
Consult with Architect immediately if discrepancies are found.

Roof Framing Plan

Scale 1:50 @ A3

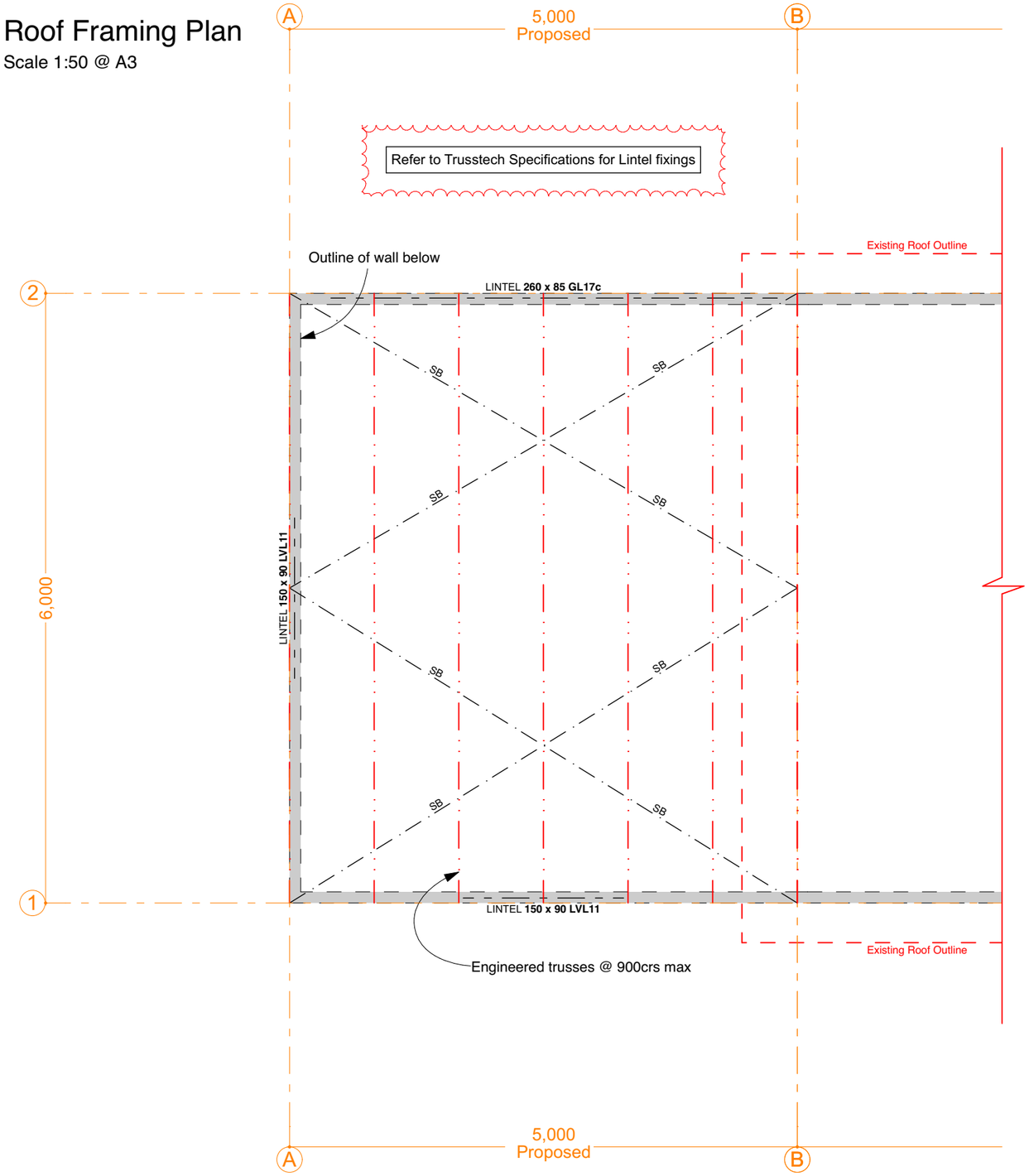

Reflected Ceiling Plan

Scale 1:100 @ A3

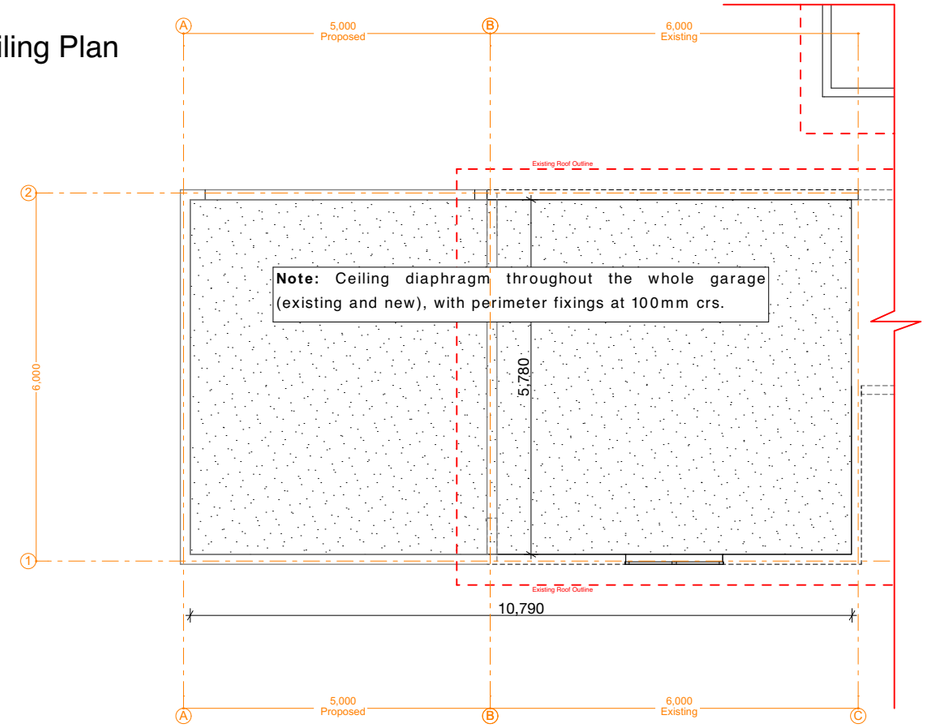

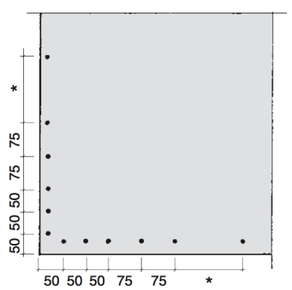

Fastening pattern for ceiling diaphragms

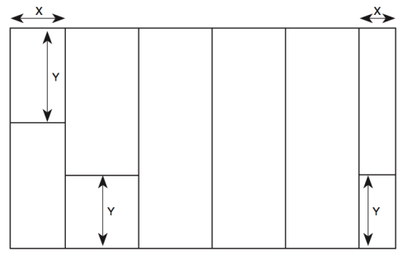

X = 900mm min or 600-900mm min provided all adjacent joints are back-blocked.

Y = 1800mm min sheet lengths at ends of ceiling diaphragms

Sheet Widths and Lengths in Ceiling Diaphragms

LEGEND

TIMBER TRUSSED RAFTER / JOIST AT NOTIONAL 900mm MAX CRS U.N.O.
NOTE: LAYOUT SHOWN IS INDICATIVE ONLY
DESIGN & CALCULATIONS TO BE PROVIDED BY SPECIALIST SUPPLIER

SB — LUMBERLOK STRIP BRACE

EXTERNAL WALL BELOW

LINTEL/TRIMMER TO DOOR / WINDOW
TO NZS 3604: 2011, as noted by Truss manufacturer

REFER TO SUPPLIED TRUSS DESIGN LAYOUTS,
FIXING DETAILS & TRUSS ELEVATIONS
FROM SED TRUSS DESIGNER
SED LINTEL SIZES WILL TAKE PRECEDENCE

LEGEND:

13mm GIB Standard square stopped,
Level 4 finish, height above FSL as noted
Fastening shall be no less than 12mm from
sheet edges and not less than 18mm from sheet end.
Refer: GIB ezyBrace® Systems Ceiling Diaphragms Installation Guide

Note: Lighting & Electrical shown separately

Issue Date:	Issue:	No:
22/09/17	Vehicle Manouvering	05
19/09/17	Council RFI Revisions	04
08/09/17	Barge Eave changed to 600	03
30/06/17	Variation	02
23/02/17	Building Consent Issue	01

Matt Butson - Garage Extension
62 Onslow Rd, Lake Hayes Estate

Scale:	Drawing Title:	Drawing No:
1:50 @ A3	**ROOF FRAMING PLAN**	**GA07**
Drawn: CH		

mark gray ARCHITECT

PO box 1733 queenstown +64 3 441 1014 0275 857 448
mark@mgarchitect.co.nz www.markgray.co.nz

Do not scale off print - refer to figured dimensions.
Refer to larger details where possible.
Confirm all dimensions on site prior to construction.
Consult with Architect immediately if discrepancies are found.

Plumbing & Drainage Plan

Scale 1:100 @ A3

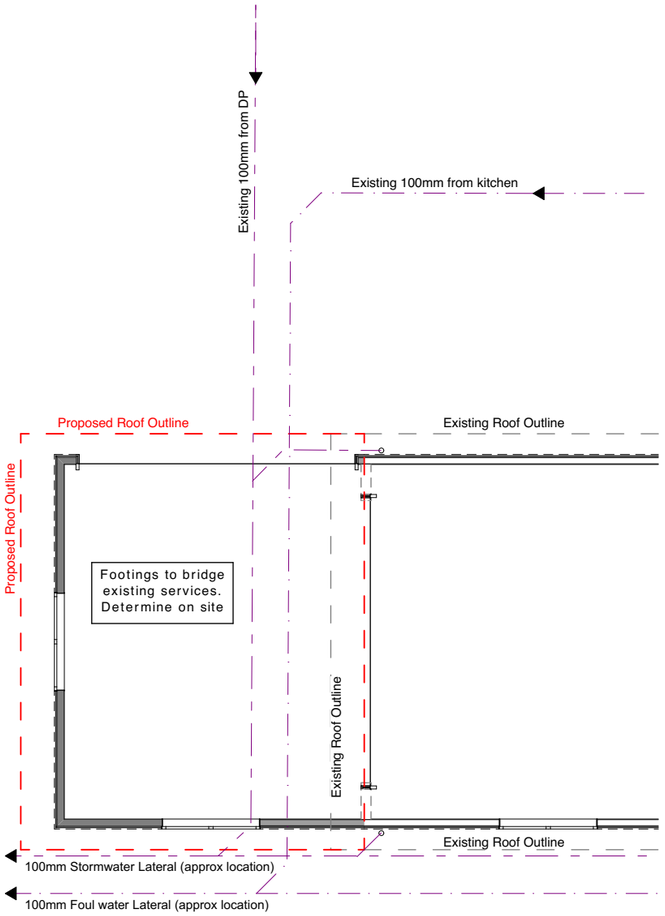

Electrical Plan

Scale 1:100 @ A3

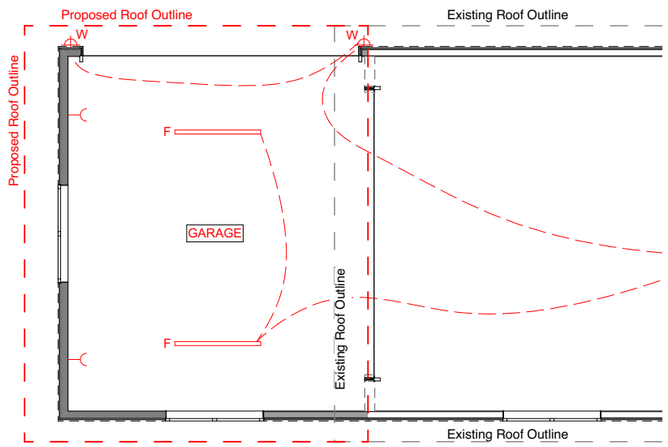

Risk Matrix Plan

Scale 1:100 @ A3

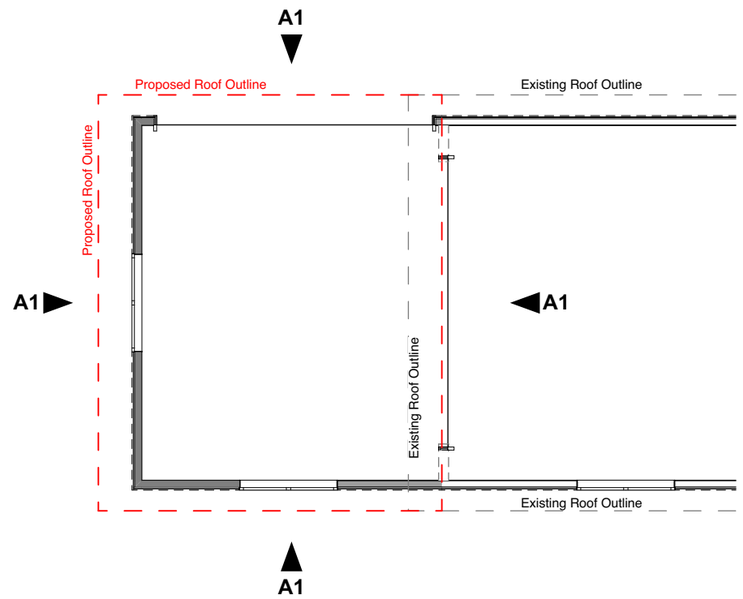

PLUMBING & DRAINAGE LEGEND

◦DP	80mm dia. Downpipe, colour to match main roof cladding
IB / IJ	Inspection Bend / Inspection Junction
Tap	Tap with removable handle, 600mm above FGL
	100mm Stormwater Lateral (approx location)
	100mm Foul water Lateral (approx location)

Downpipe Area Calculations

Existing area = 48.61msq
Proposed area = 34.27msq
Total Roof area = 82.88msq

(2x) existing downpipes sufficient cover under - Acceptable Solutions E1 - Table 4.2.1

ELECTRICAL LEGEND

POWER

DOUBLE SWITCHED POWER SOCKET

GARAGE — PROVIDE CEILING POWER POINT FOR GARAGE DOOR TO LOCATION SPECIFIED BY MANUFACTURER

LIGHTING

LIGHT SWITCH (TYPICAL 1100MM ABOVE FFL)

SWITCHING LINE

F — FLUORESCENT BATTEN BULKHEAD FITTING

W — WALL-MOUNTED BI-DIRECTIONAL LED SPOT LIGHT, SILVER.

RISK MATRIX LEGEND

A1 VERTICAL PLY SHEET & BATTEN OVER DRAINED CAVITY

Risk Factor	LOW		MEDIUM		HIGH		VERY HIGH		Subtotals
Wind Zone (per NZS 3604)	0		0		1	1	2		**1**
Number of storeys	0	0	1		2		4		**0**
Roof/wall intersection design	0	0	1		3		5		**0**
Eaves width	0		1			2	5		**2**
Envelope complexity	0	0	1		3		6		**0**
Deck design	0	0	2		4		6		**0**
							Total risk score:		**3**

Issue Date:	Issue:	No:
22/09/17	Vehicle Manouvering	05
19/09/17	Council RFI Revisions	04
08/09/17	Barge Eave changed to 600	03
30/06/17	Variation	02
23/02/17	Building Consent Issue	01

Matt Butson - Garage Extension
62 Onslow Rd, Lake Hayes Estate

Scale: 1:100 @ A3
Drawn: CH
Drawing Title: **P&D, ELECTRICAL & RISK MATRIX PLANS**
Drawing No: **GA08**

mark gray ARCHITECT

PO box 1733 queenstown +64 3 441 1014 0275 857 448
mark@mgarchitect.co.nz www.markgray.co.nz

Do not scale off print - refer to figured dimensions.
Refer to larger details where possible.
Confirm all dimensions on site prior to construction.
Consult with Architect immediately if discrepancies are found.

AA GA01 SECTION
SCALE 1:50 @ A3

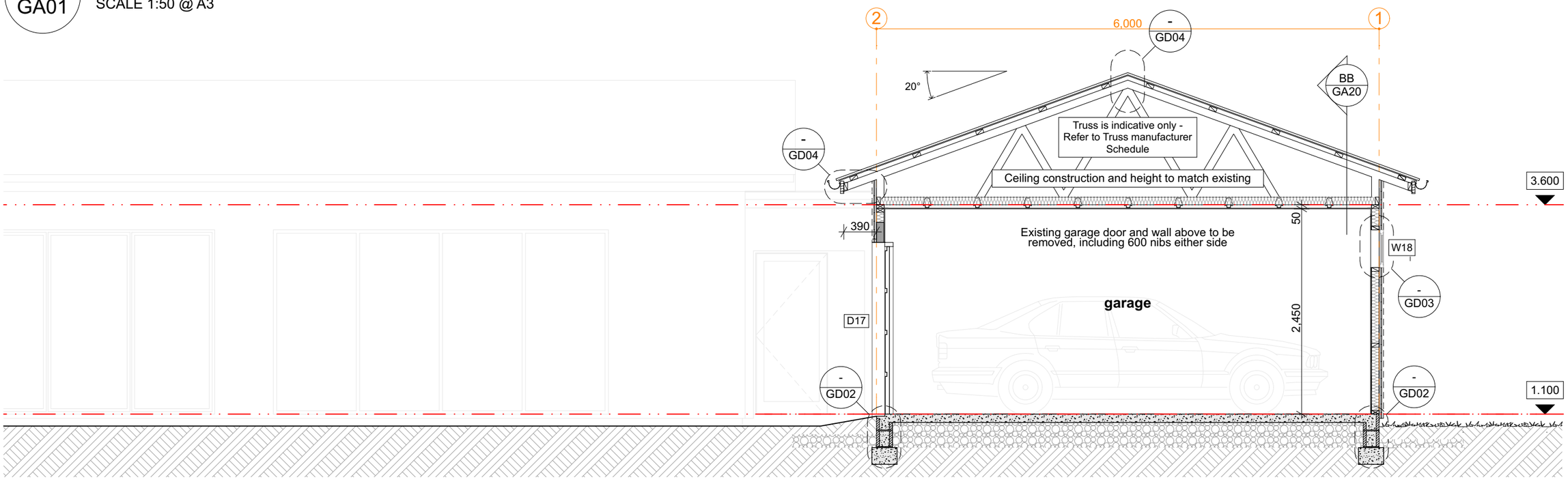

BB GA01 SECTION
SCALE 1:50 @ A3

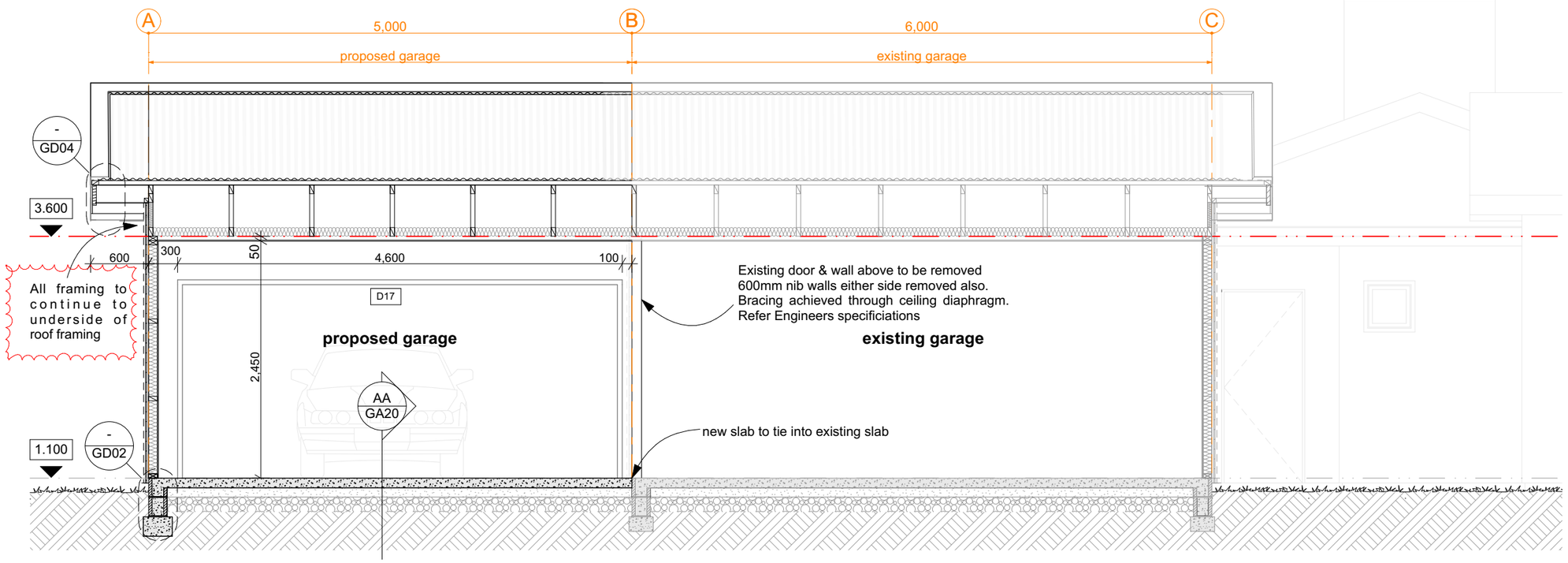

22/09/17	Vehicle Manouvering	05
19/09/17	Council RFI Revisions	04
08/09/17	Barge Eave changed to 600	03
30/06/17	Variation	02
23/02/17	Building Consent Issue	01
Issue Date:	Issue:	No:

Matt Butson - Garage Extension
62 Onslow Rd, Lake Hayes Estate

Scale:	Drawing Title:	Drawing No:
1:50 @ A3	**SECTIONS**	**GA20**
Drawn: CH		

mark gray
ARCHITECT

PO box 1733 queenstown +64 3 441 1014 0275 857 448
mark@mgarchitect.co.nz www.markgray.co.nz

Do not scale off print - refer to figured dimensions.
Refer to larger details where possible.
Confirm all dimensions on site prior to construction.
Consult with Architect immediately if discrepancies are found.

01 - TYPICAL WALL CONSTRUCTION DETAILS

SCALE 1:5 @ A3

GENERAL NOTES

- Read in conjunction with cladding manufacturer standard details
- Wall linings may vary subject to bracing requirements - refer GA04 - Set Out Plan

TYPICAL EXTERNAL WALLS (BOARD & BATTEN)

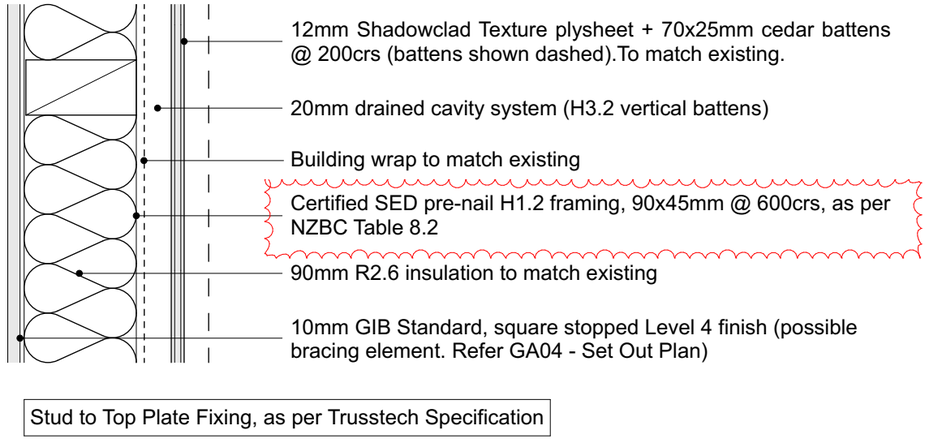

EXTERNAL CORNER PLAN DETAIL (BOARD & BATTEN)

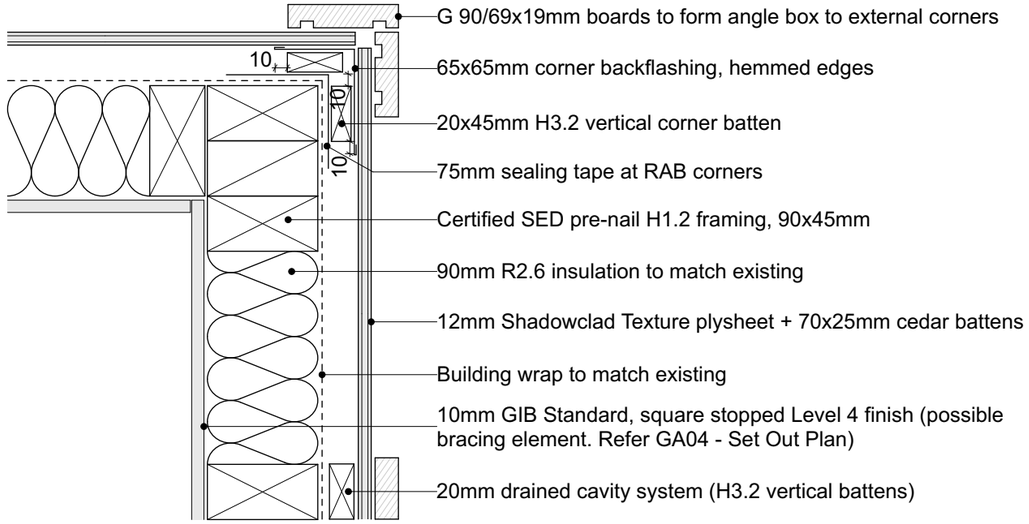

TYPICAL GARAGE DOOR JAMB DETAIL (BOARD & BATTEN)

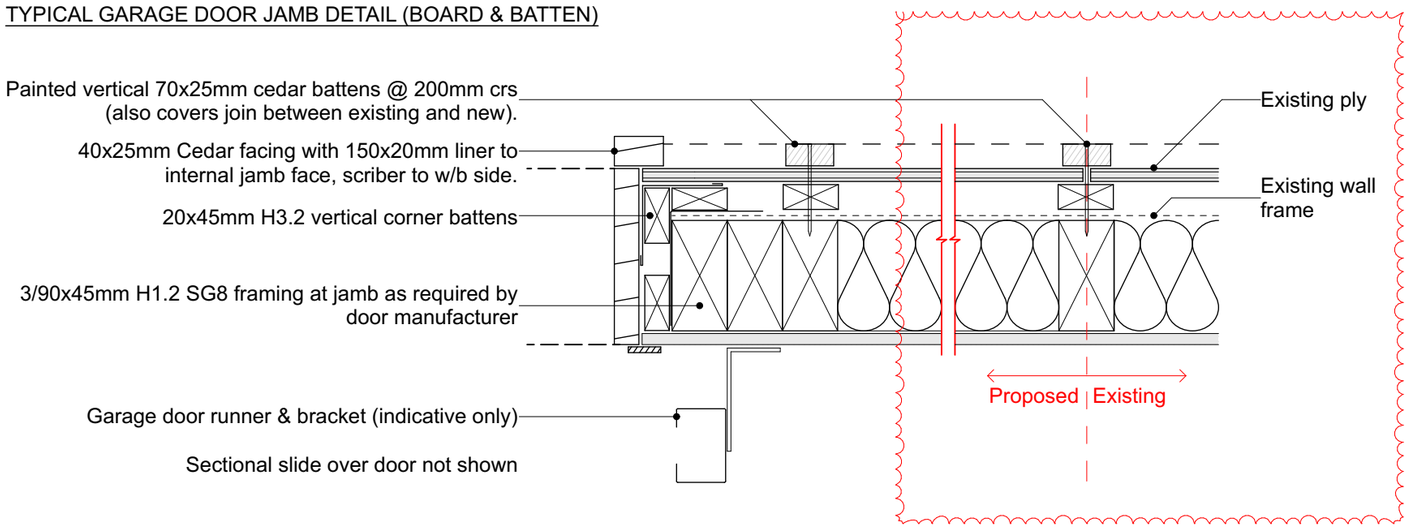

Issue Date:	Issue:	No:
22/09/17	Vehicle Manouvering	05
19/09/17	Council RFI Revisions	04
08/09/17	Barge Eave changed to 600	03
30/06/17	Variation	02
23/02/17	Building Consent Issue	01

Matt Butson - Garage Extension
62 Onslow Rd, Lake Hayes Estate

Scale:	Drawing Title:	Drawing No:
1:5 @ A3	**DETAILS**	**GD01**
Drawn: CH		

mark gray
ARCHITECT

PO box 1733 queenstown +64 3 441 1014 0275 857 448
mark@mgarchitect.co.nz www.markgray.co.nz

Do not scale off print - refer to figured dimensions.
Refer to larger details where possible.
Confirm all dimensions on site prior to construction.
Consult with Architect immediately if discrepancies are found.

02 - TYPICAL SLAB EDGE DETAILS (BOARD & BATTEN)

SCALE 1:5 @ A3

GENERAL NOTES

- Read in conjunction with cladding manufacturer standard details
- Wall linings may vary subject to bracing requirements - refer GA04 - Set Out Plan

MAIN EXTERNAL WALLS (BOARD & BATTEN)

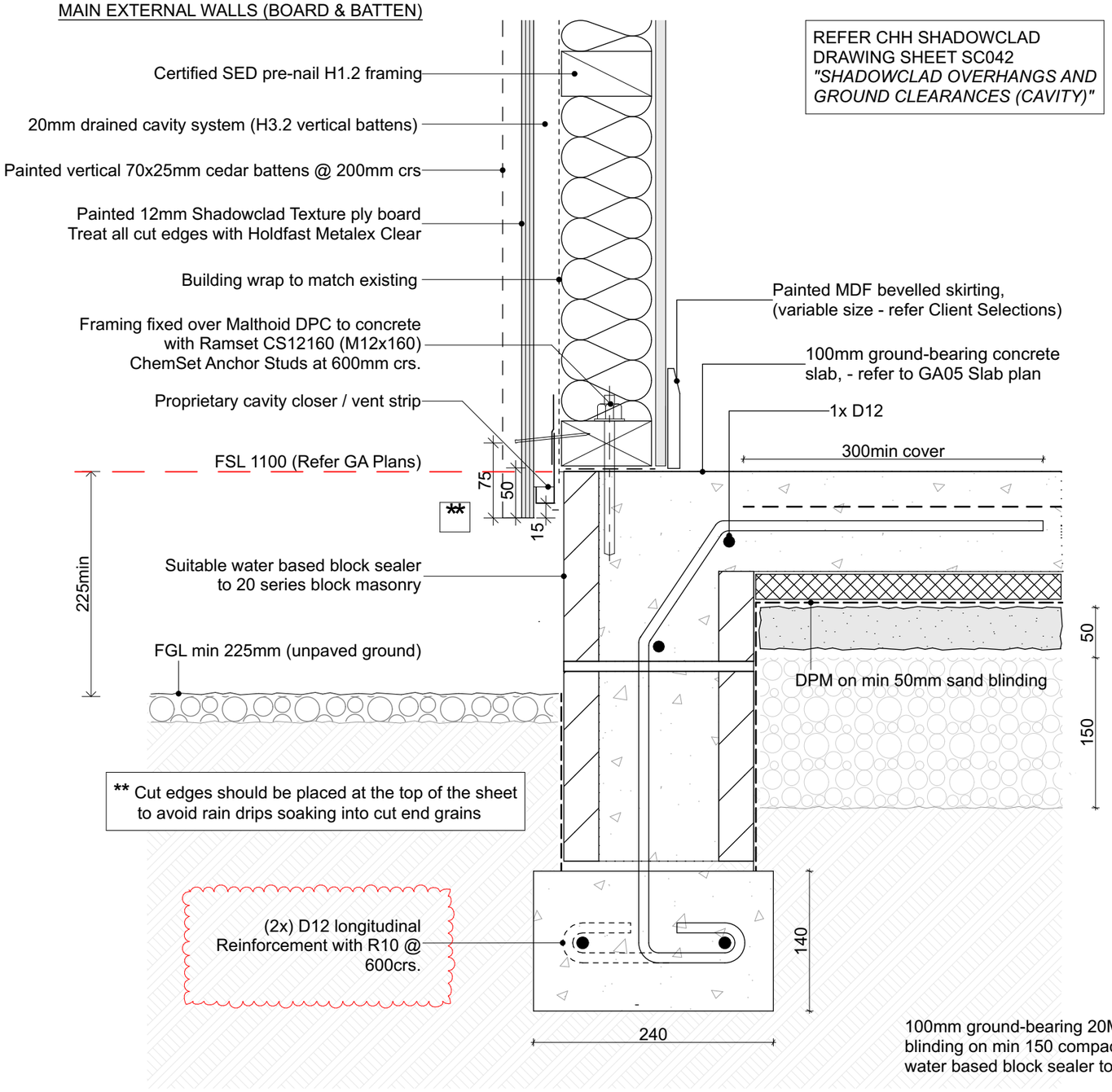

GARAGE DOOR SLAB EDGE REBATE DETAIL

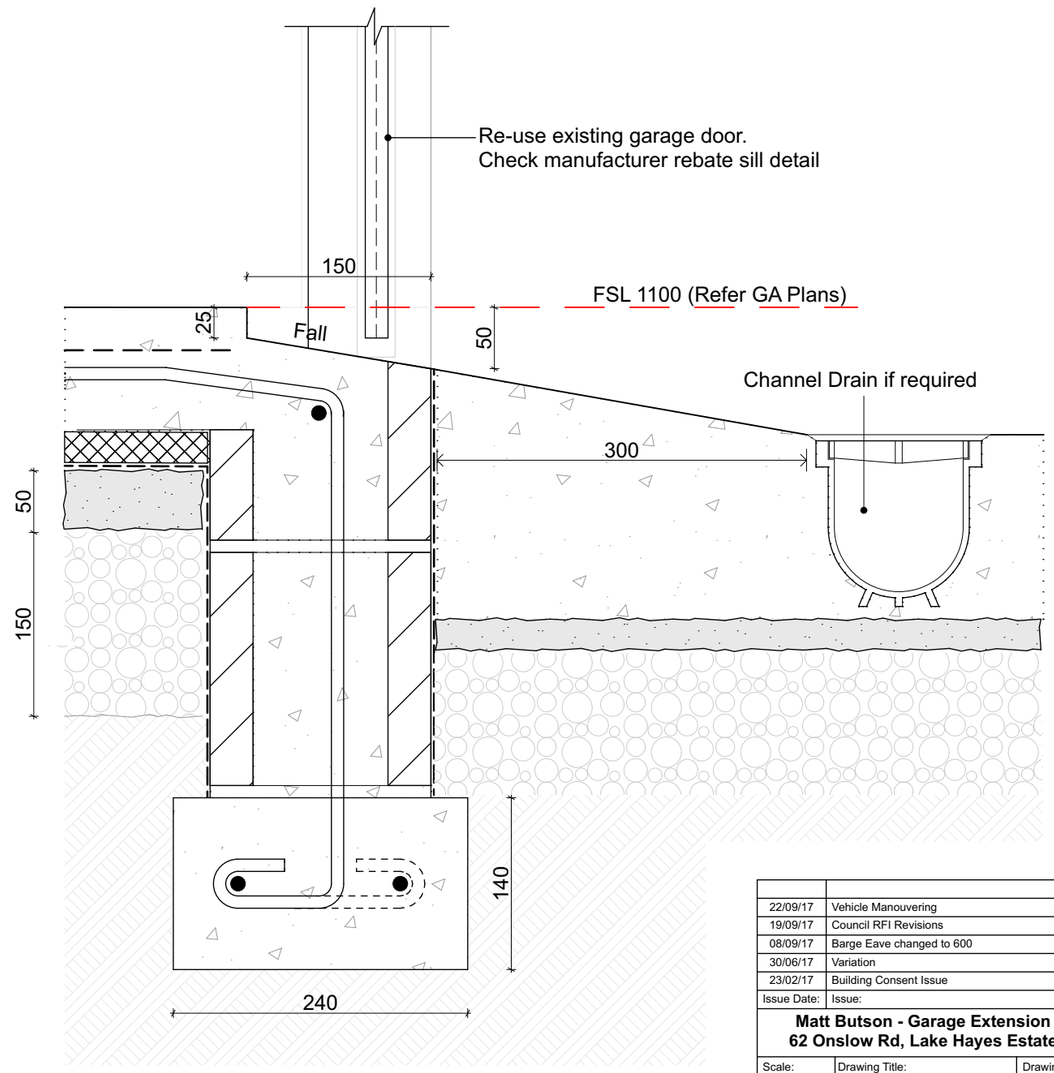

100mm ground-bearing 20Mpa concrete slab on DPM on min 50mm sand blinding on min 150 compacted hardfill. Slab thickenings at perimeter. Suitable water based block sealer to all slab edges.

Issue Date:	Issue:	No:
22/09/17	Vehicle Manouvering	05
19/09/17	Council RFI Revisions	04
08/09/17	Barge Eave changed to 600	03
30/06/17	Variation	02
23/02/17	Building Consent Issue	01

Matt Butson - Garage Extension
62 Onslow Rd, Lake Hayes Estate

Scale:	Drawing Title:	Drawing No:
1:5 @ A3	**DETAILS**	**GD02**
Drawn: CH		

mark gray ARCHITECT

PO box 1733 queenstown +64 3 441 1014 0275 857 448
mark@mgarchitect.co.nz www.markgray.co.nz

Do not scale off print - refer to figured dimensions.
Refer to larger details where possible.
Confirm all dimensions on site prior to construction.
Consult with Architect immediately if discrepancies are found.

03 - TYPICAL WINDOW DETAILS (BOARD & BATTEN)

SCALE 1:5 @ A3

GENERAL NOTES

- Read in conjunction with cladding manufacturer standard details
- Wall linings may vary subject to bracing requirements - refer GA04 - Set Out Plan

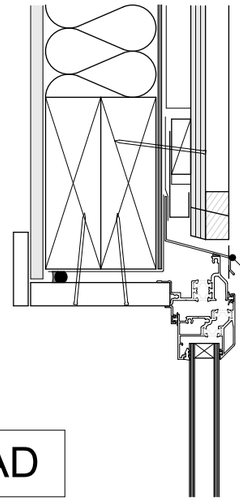

REFER CHH SHADOWCLAD
DRAWING SHEET SC028
"SHADOWCLAD WINDOW HEAD DETAIL (CAVITY)"

Head flashing size to allow for dressing over pictureframe cedar battens at jambs. note head flashing sits forward of cedar picture frames

HEAD

JAMB

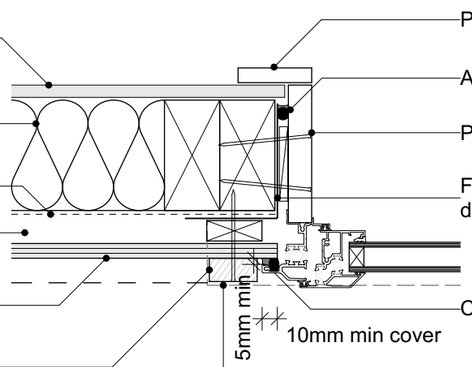

10mm GIB Standard, square stopped, Level 4 finish

R2.6 Insulation to match exisiting

Building wrap to match existing

20mm drained cavity system (H3.2 vertical battens)

Painted 12mm Shadowclad Texture ply board
Treat all cut edges with Holdfast Metalex Clear

Painted vertical 70x25mm cedar battens @ 200mm crs

(note head flashing sits forward of cedar picture frames)

Painted 12x60mm MDF architrave

Air seal over PEF rod

Painted H3 finger-jointed pine jambliner

Flashing tape# to cover entire depth of jamb

Continuous seal with foam bond breaker

5mm min

10mm min cover

REFER CHH SHADOWCLAD
DRAWING SHEET SC030
"SHADOWCLAD JAMB DETAIL (CAVITY)"

SILL
(WANZ BAR)

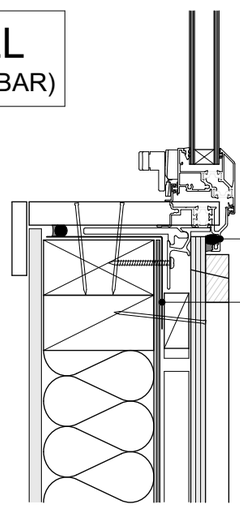

(Seal & min overlap cover as per Jamb Detail above)

Flexible sill flashing tape# to run continuously along sill & 200mm up jambs & min 50mm over the building wrap

REFER CHH SHADOWCLAD
DRAWING SHEET SC032
"SHADOWCLAD WINDOW SILL DETAIL (CAVITY)"

Read in conjunction with standard manufacturer details for:-
- Window Joinery Manufacturer
- CHH Shadowclad
- Building wrap manufacturer

Note: minimum flashing tape requirements around window reveals will depend on bracing requirements - refer Engineer Spec

Glazing to match existing
Grade A Safety Glass where required by NZBC F2 / NZS 4223
Duralloy powder-coat, colour TBC.

Issue Date:	Issue:	No:
22/09/17	Vehicle Manouvering	05
19/09/17	Council RFI Revisions	04
08/09/17	Barge Eave changed to 600	03
30/06/17	Variation	02
23/02/17	Building Consent Issue	01

Matt Butson - Garage Extension
62 Onslow Rd, Lake Hayes Estate

Scale: 1:5 @ A3
Drawing Title: **DETAILS**
Drawing No: **GD03**
Drawn: CH

mark gray
ARCHITECT

PO box 1733 queenstown +64 3 441 1014 0275 857 448
mark@mgarchitect.co.nz www.markgray.co.nz

Do not scale off print - refer to figured dimensions.
Refer to larger details where possible.
Confirm all dimensions on site prior to construction.
Consult with Architect immediately if discrepancies are found.

04 - TYPICAL EAVE, BARGE & RIDGE DETAILS

SCALE 1:5 @ A3

GENERAL NOTES

- Read in conjunction with cladding manufacturer standard details
- Wall linings may vary subject to bracing requirements - refer GA04 - Set Out Plan

BARGE DETAIL

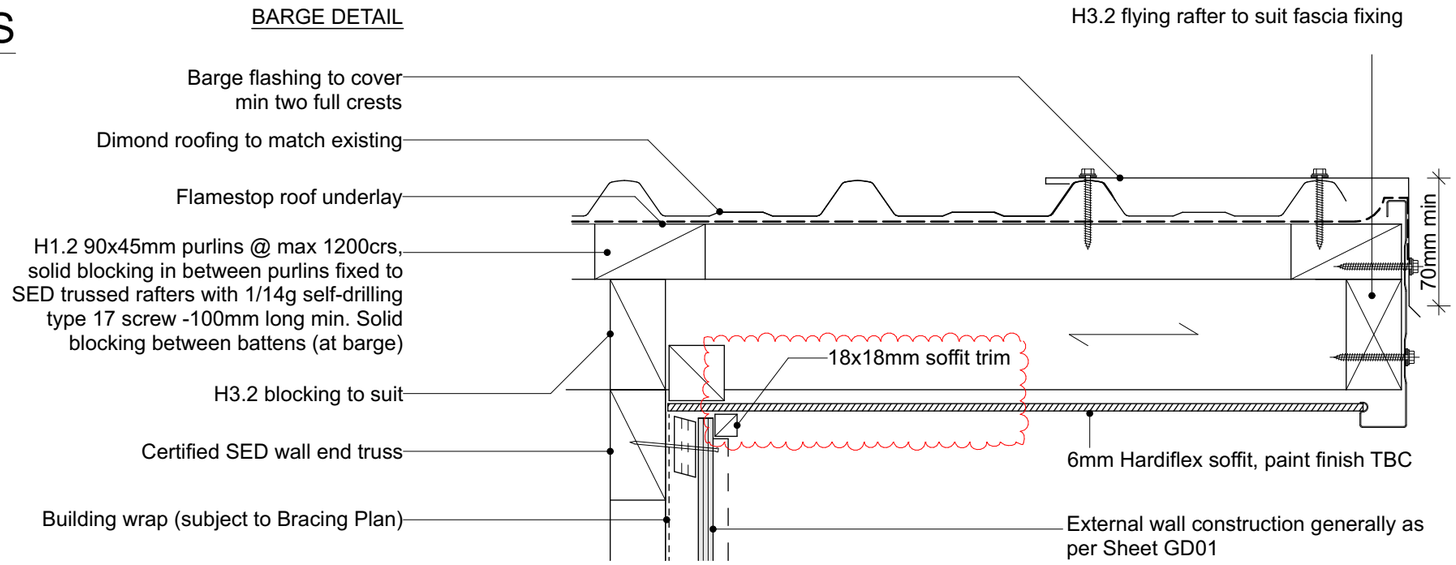

EAVE DETAIL

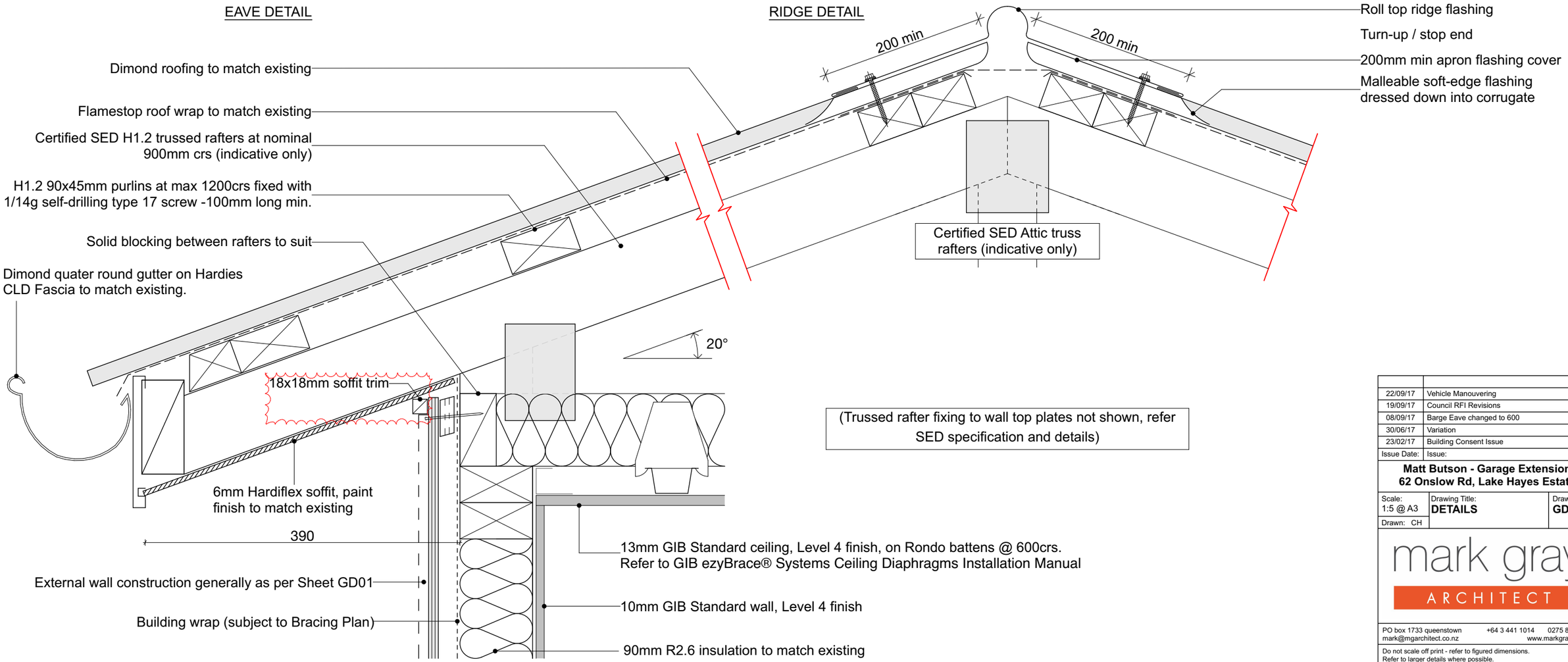

Issue Date:	Issue:	No:
22/09/17	Vehicle Manouvering	05
19/09/17	Council RFI Revisions	04
08/09/17	Barge Eave changed to 600	03
30/06/17	Variation	02
23/02/17	Building Consent Issue	01

Matt Butson - Garage Extension
62 Onslow Rd, Lake Hayes Estate

Scale:	Drawing Title:	Drawing No:
1:5 @ A3	**DETAILS**	**GD04**
Drawn: CH		

mark gray ARCHITECT

PO box 1733 queenstown +64 3 441 1014 0275 857 448
mark@mgarchitect.co.nz www.markgray.co.nz

Do not scale off print - refer to figured dimensions.
Refer to larger details where possible.
Confirm all dimensions on site prior to construction.
Consult with Architect immediately if discrepancies are found.